Specifications

Street Light T31A Series

HANGZHOU HPWINNER OPTO CORPORATION

NO. 18. Kangzhong Road, Gongshu District, Hangzhou, 310015, China.

Phone: +86-571-88399635.Fax: +86-571-89971205

www.hpwinner.com

HPWINNER

Specifications

Street Light T31A Series

Features

- Modular pluggable technology, easy tool onsite maintenance;
- Honeycomb briquette burning effect and the whole structure cooling technology;
- Double-coupling IP68 protection, highest waterproof level;
- Metal structure, high mechanical strength;
- Ergonomic light distribution to achieve uniform illuminating effect;
- Free modular serialization and full power range solution.

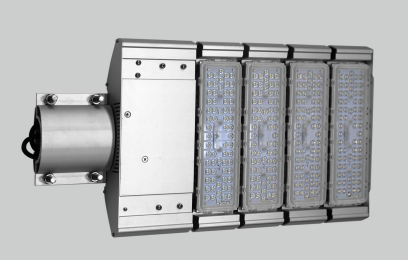

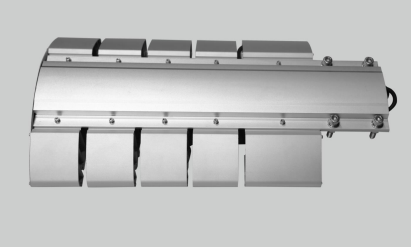

Applications

- Street lighting
- Parking lots
- Roadway lighting
- Path lighting

Standard Colors

- Silver

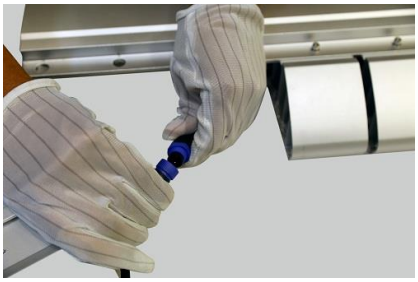

Advantages

	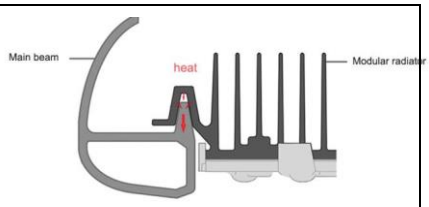
Air Convection Effect	Whole-structure Heat Dissipation
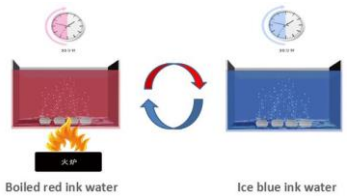	
Double-coupling IP68 Protection	Tool-less Maintenance
LUMILEDS LUXEON 3030 2D Hot-color targeting ensures that color is within ANSI bin at typical application conditions, 85°C	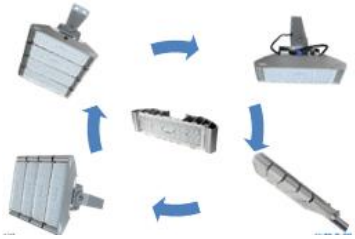
High-efficacy LED Light Source	Flexible Combinations of Modules

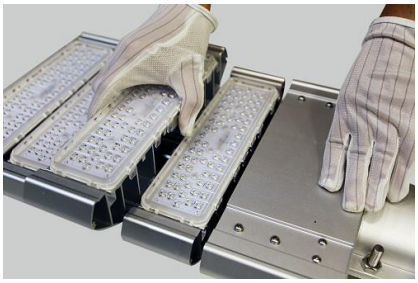

HPWINNER

Specifications

Street Light T31A Series

Electrical & Photometric

Model	Input Voltage (v)	Drive Current (mA)	Power (w)	Luminous Efficacy (lm/w)	Lumens (lm)	Power Factor	Power Efficiency	Light Distributions	LED Brand	CCT (k)	CRI
T31A-2	AC100-240	700	80	115±5	9200±400	0.95	91%	Batwing (Type II III)	Lumileds	3000 4000 5000 5700	⩾70
		860	100	110±5	11000±500						
		1050	120	105±5	12600±600						
T31A-3		700	120	115±5	13800±600						
		860	150	110±5	16500±750						
		1050	180	105±5	18900±900						
T31A-4		700	160	115±5	18400±800						
		860	200	110±5	22000±1000						
		1050	240	105±5	25200±1200						
T31A-5		700	200	115±5	23000±1000						
		860	250	110±5	27500±1250						

*Surge Protection: 10KV.

Working Environment & Packing

Model	Working Environment	Storage Temperature	IP Rating	LED Life Span (h)	Housing Material	Pole Diameter (mm)	Product Dimensions (mm)	Carton Size (mm)	N.W (kg)	G.W (kg)
T31A-2	-40℃~+50℃, 10%~90%RH.	-40℃~+50℃	LED Module IP68	>50,000	Aluminum Alloy	57-63	395*300*90	480*385*165	5.0	5.9
T31A-3							475*300*90	560*385*165	5.8	6.9
T31A-4							555*300*90	640*385*165	6.6	8.0
T31A-5							655*300*90	740*385*165	7.6	9.2

Warranty

5-year limited warranty is standard on luminaire and components.

HPWINNER

Specifications

Street Light T31A Series

Light Distributions

T2S2321	T2S1324	T2S2201
IESNA Type II Short	IESNA Type II Short	IESNA Type II Short
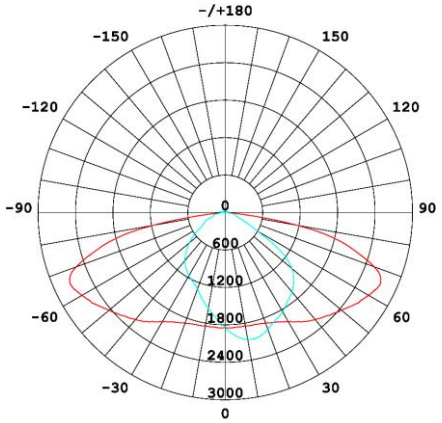	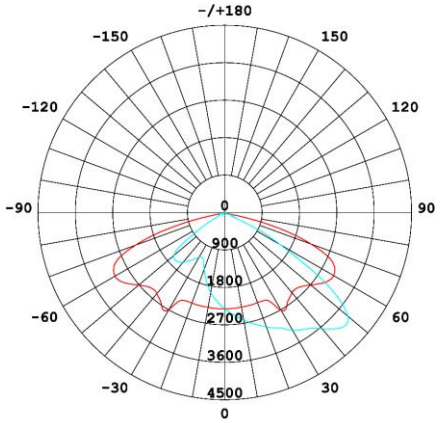	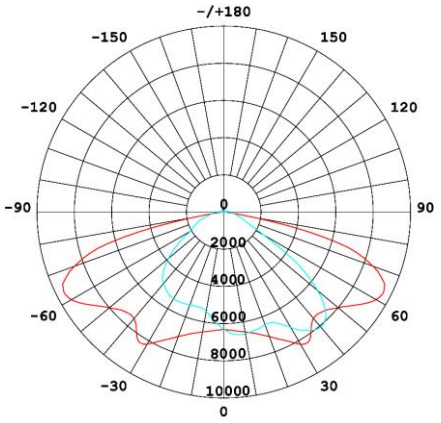

T3M1321
IESNA Type III Medium
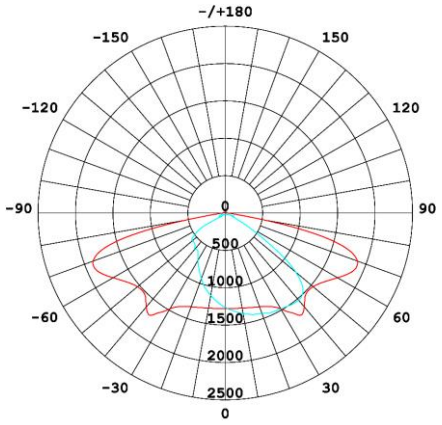

Specifications

Street Light T31A Series

External Design Features

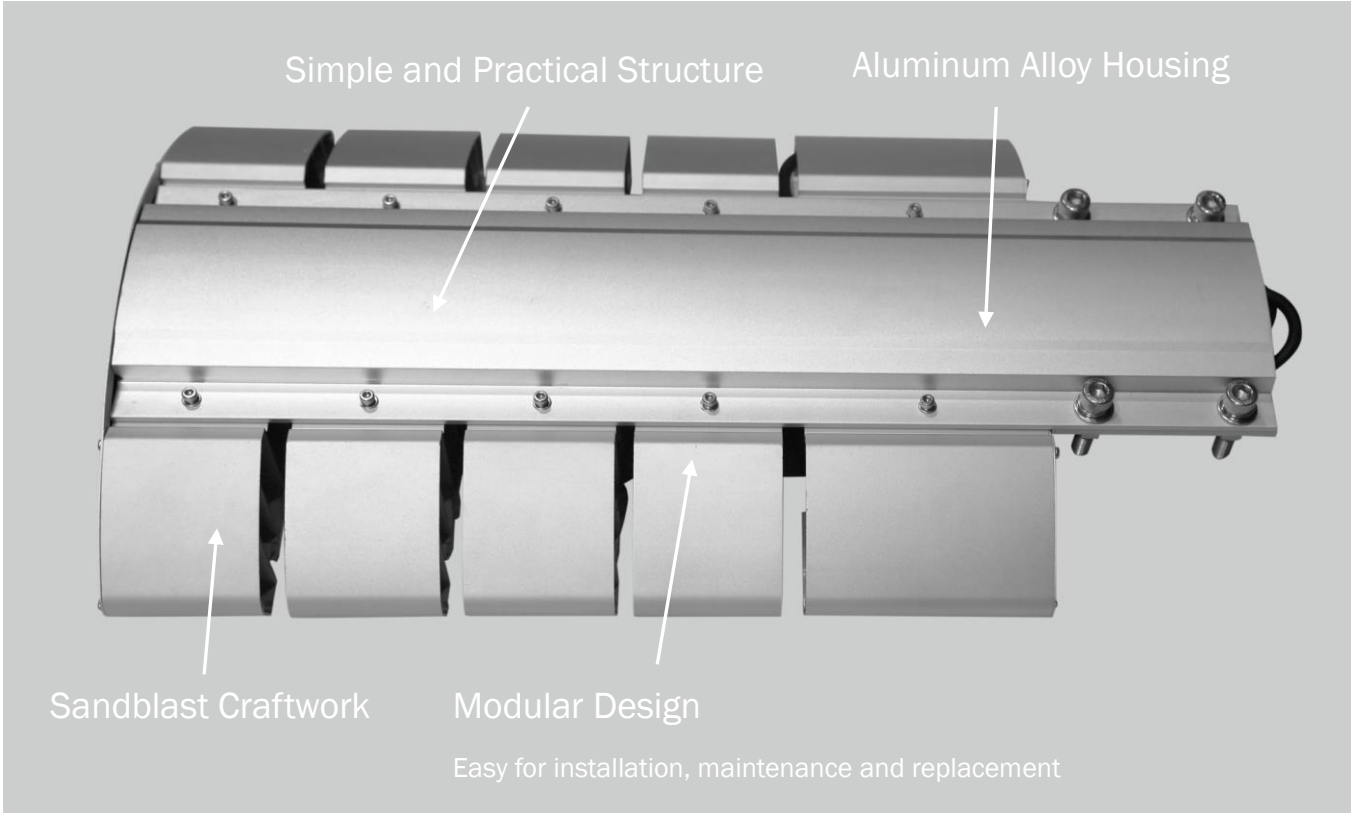

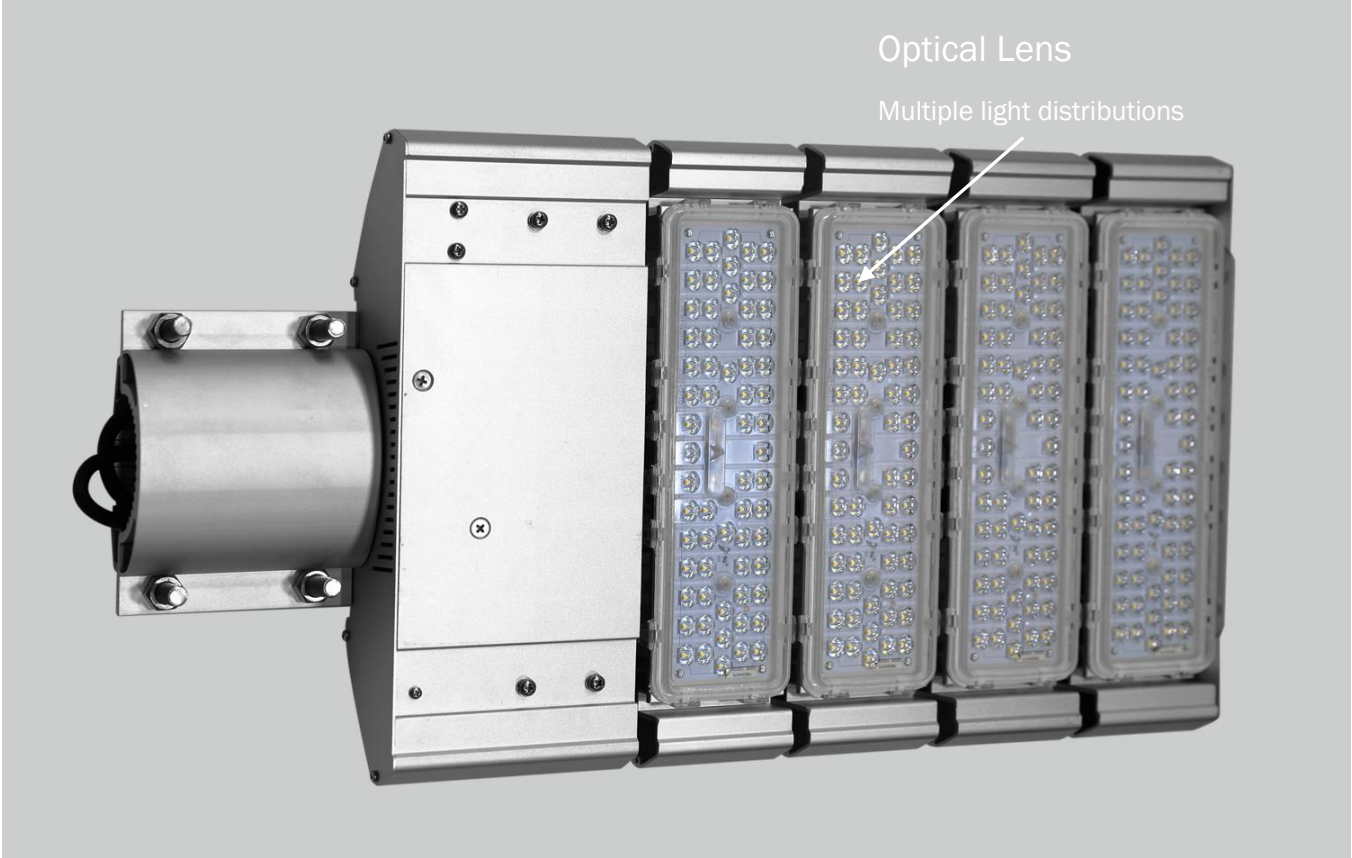

HPWINNER

Internal Design Features

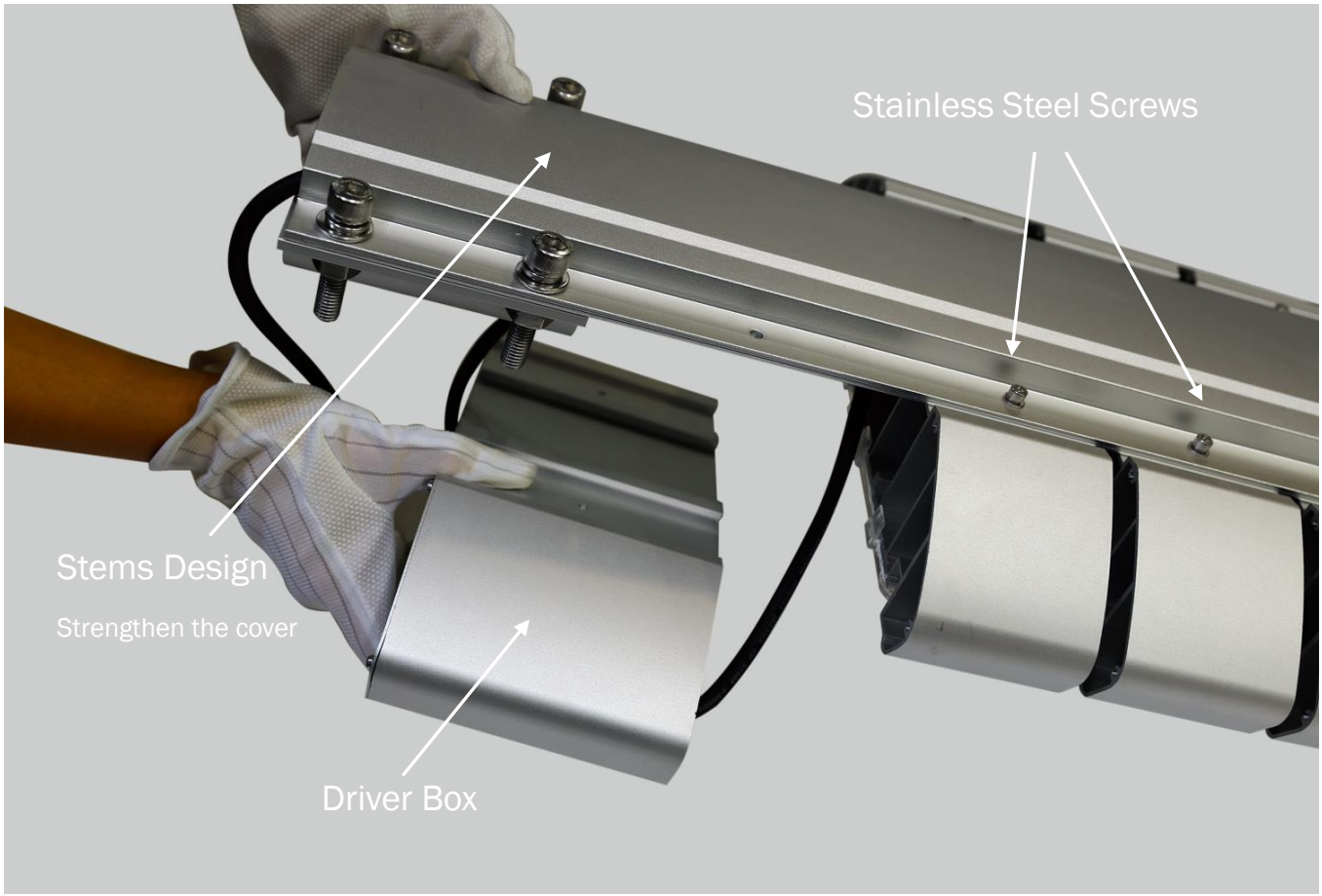

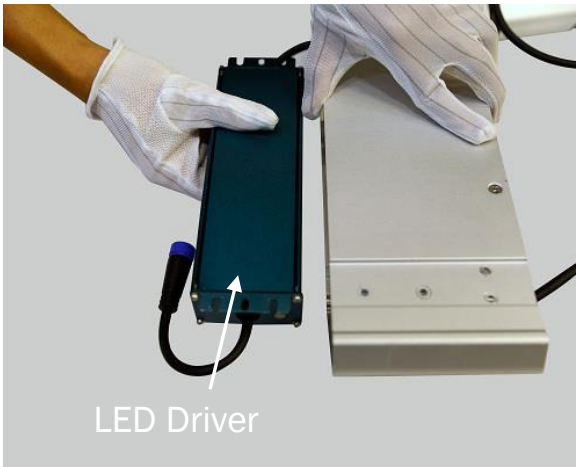

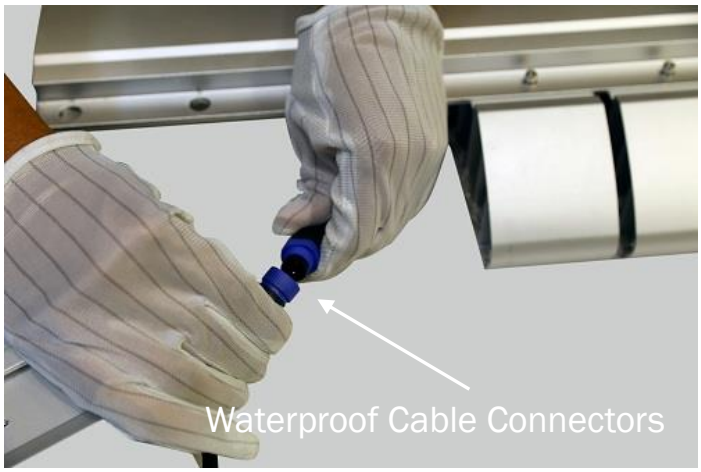

Specifications

Street Light T31A Series

Dimensions

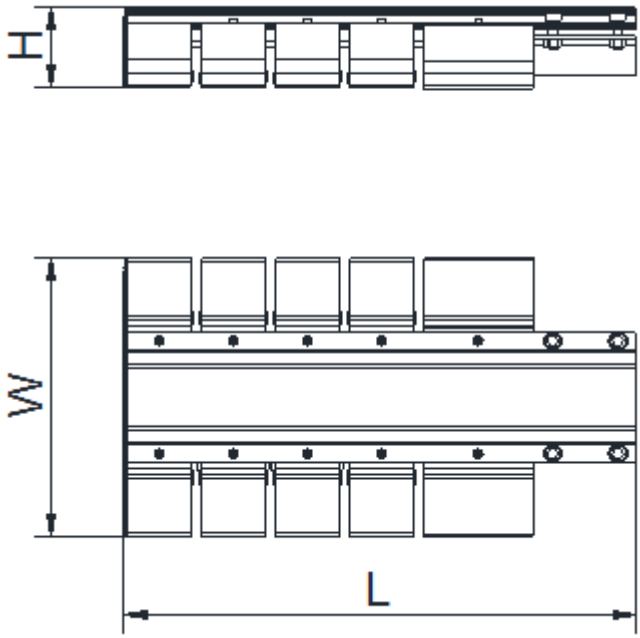

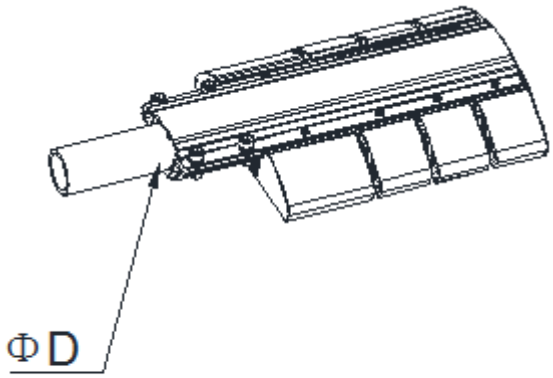

T31A	-1	-2	-3	-4
L	395mm (1 ft 3 $^{35}/_{64}$ inch)	475mm (1 ft 6 $^{45}/_{64}$ inch)	555mm (1 ft 9 $^{27}/_{32}$ inch)	655mm (2 ft 1 $^{25}/_{32}$ inch)
W	300mm (11 $^{13}/_{16}$ inch)			
H	90mm (3 $^{35}/_{64}$ inch)			
D	ϕ57-ϕ63mm (ϕ2 $^{1}/_{4}$ inch – ϕ2 $^{31}/_{64}$ inch)			

Installation

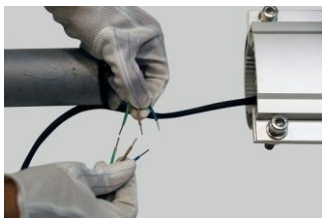	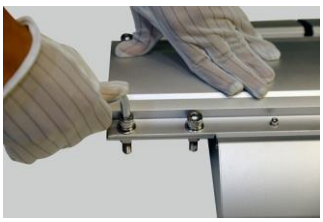	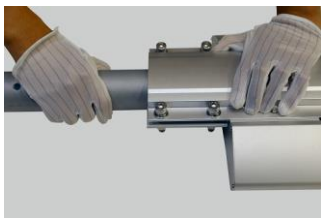	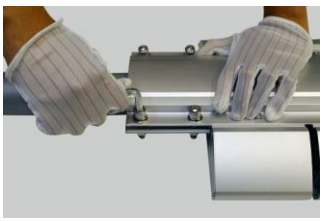
1. Connect the ground wire, neutral wire and live wire to the AC input (make sure it sufficiently grounded)	2. Loosen the four M10x45 hexagon socket head cap screws on the beam.	3. Draw the luminary onto the pole.	4. Tighten up the screws on the beam.

Maintenance

Driver & Electrical Parts

		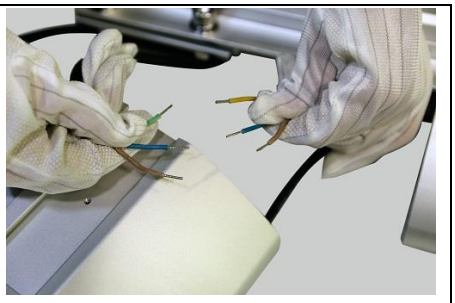
1. Unscrew the two M4x10 screws for the driver casing.	2. Draw the driver casing out.	3. Disconnect the driver from the wires of AC input.
		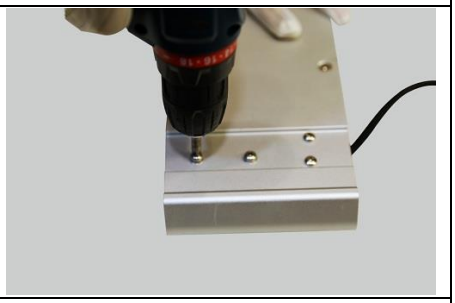
4.Unscrew the waterproof connector for the driver.	5. Unscrew the four M3x6 screws on the shield of the driver casing, then remove the shield.	6. Unscrew the screws on the back of the casing.
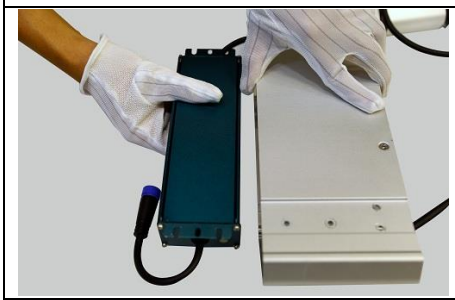	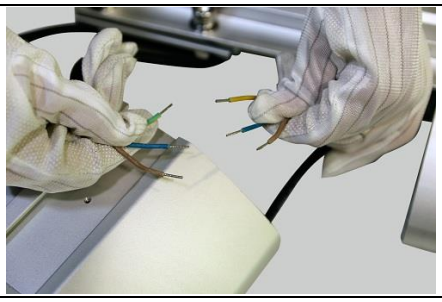	
7. Replace the failed driver with a new set. Tighten up the screws for driver and for the shield.	8. Re-connect the waterproof connector and to the AC input.	9. Draw the driver casing in to hang it on the beam at the groove, and fix it with screws on the beam.

Specifications

Street Light T31A Series

Module

	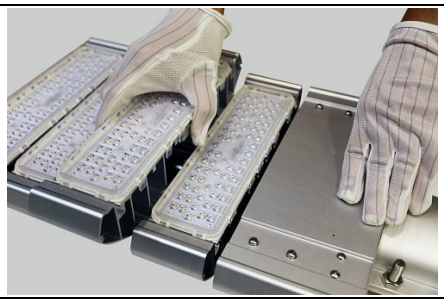	
1. Unscrew the two M4x10 hexagon socket screws for the failed module.	2. Draw the module out.	3. Unscrew and disconnect the waterproof connector.
	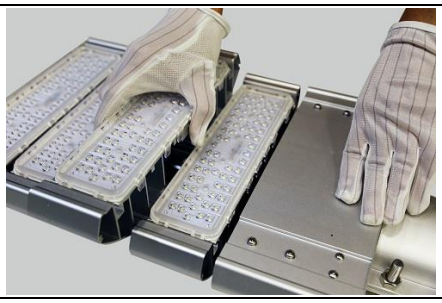	
4. Replace the failed module with a new one. Align and tighten up the connectors.	5. Draw the module in to hang it on the beam at the groove.	6. Tighten up the screws for the module on the beam.

Specifications

Street Light T31A Series

Connectors Operation Guide

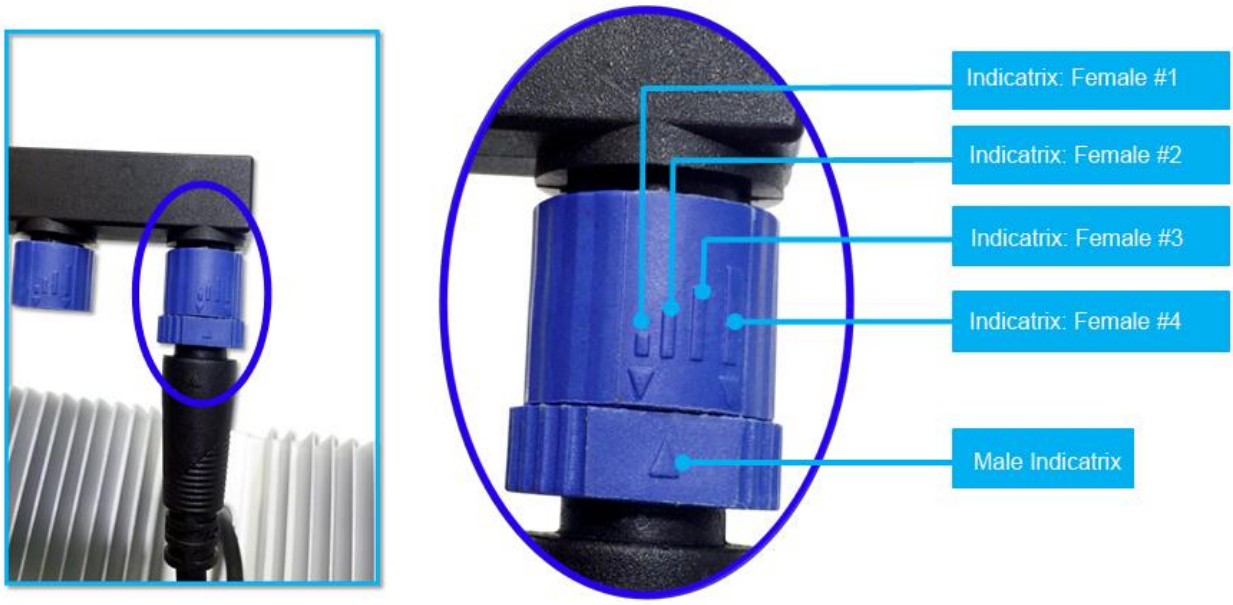

Spin the male terminal clockwise. When the male indicatrix points between indicatrix female #2 and #3, and the gap between male and female terminals is extremely small, the connectors are well connected; otherwise, there will be risks in its waterproof performance.

When the gap between male and female terminals is extremely small, if any looseness can be sensed, please spin the male terminal clockwise until tight.

Specifications

Street Light T31A Series

Ordering Information

Example: T31AS- 2- 120- BK- M31- 2321- 7- 40- PH

Ordering Information	T	31A	S	-	2	-	120	BK	-	M31	L	2321	-	7	40	-	PH	
	1	2	3		4		5	6		7	8	9		10	11		12	
1. Luminary Type	T: Street light	TS: Tunnel light	TF: High bay light	FL: Flood light	GL: Garden light													
2. Luminary Series	11A	1B	1D	1F	2A	2C	3A	3B	……									
3. Driving Current	Blank/N: ≤700mA	S: ＞700mA																
4. Module Qty	N: Non-modular luminary	1: 1 module	2: 2 modules	3: 3 modules	4: 4 modules ……													
5. System Power	10: 10W	20: 20W	30: 30W	40: 40W	50: 50W ……													
6. Housing Color	BK: Black	WH: White	GY: Grey	SR: Silver	BU: Blue	BUWH: Blue top & White base	BUGY: Blue top & Grey base	OTH: Other										
7. Module Series	Blank: Non-modular luminary	M1: M1 module	M2: M2 module	M8: M8 module ……														
8. LED Brand	L: LUMILEDS	C: CREE	O: OSRAM	N: NICHIA	S: SAMSUNG	OTH: Other												
9. Lens Code	3501	3100	3702	3910	2701	5703	3040	1812	1412 ……									
10. CRI	6: ≥60	7: ≥70	8: ≥80	9: ≥90	OTH: Other													
11. CCT	30: 3000K	40: 4000K	50: 5000K	57: 5700K														
12. Driver Brand	MO: MOSO	MW: MEAN WELL	PH: PHILIPS	IN: INVENTRONICS	AD: ADAYO	OTH: Other												

***Ordering information is for reference only. Some product configurations are not available. Please consult Specifications for specific product availability and for further details.**

.